TECHNICAL BULLETIN

No: LTB00051
Issue: 1
Date: 26 Jun 2007

CIRCULATE: TO	Service Mgr	Warranty	Workshop	Body Shop	Parts
	X	X	X	X	X

SECTION: 303-06

Starter Motor Solenoid Replacement

AFFECTED VEHICLE RANGE:

Freelander (LN)	**VIN: 2A353298 – 5A489743**
LR3 (LA)	**VIN: 5A000360 Onwards**
Range Rover Sport (LS)	**VIN: 6A900129 Onwards**
Range Rover (LM)	**VIN: 6A198058 Onwards**

CONDITION SUMMARY:

STARTER MOTOR SOLENOID IS NOW AVAILABLE AS A SERVICEABLE PART

Situation: The starter motor solenoid is now available as a serviceable part on the models listed above.

Action: After completion of the diagnostic aid in the Repair Procedure section to ensure an accurate diagnosis, replacing the solenoid instead of the complete starter motor assembly may be the most appropriate repair.

PARTS:

LR005978	**.....Starter Solenoid – Freelander - KV6**	**Qty 1**
LR005977	**.....Starter Solenoid – LR3 V6**	**Qty 1**
LR005973	**.....Starter Solenoid – LR3/RR Sport – AJV8**	**Qty 1**
LR005974	**.....Starter Solenoid – Range Rover – AJV8**	**Qty 1**

WARRANTY:

NOTE: Repair procedures are under constant review, and therefore times are subject to change; those quoted here must be taken as guidance only. Always refer to DDW to obtain the latest repair time.

DDW requires the use of causal part numbers. Labor only claims must show the causal part number with a quantity of zero.

Description	*SRO*	*Time (Hours)*	*Condition Code*	*Causal Part*
Replace Starter Solenoid Freelander - KV6	86.60.08	0.90		
Replace Starter Solenoid LR3 - V6	86.60.08	1.60		
Replace Starter Solenoid LR3 - AJV8	86.60.08	1.90		
Replace Starter Solenoid Range Rover Sport AJV8 (NA/SC)	86.60.08	1.30		
Replace Starter Solenoid Range Rover AJV8 (NA/SC)	86.60.08	1.10		

Normal warranty policy and procedures apply.

NOTE: The information in Technical Bulletins is intended for use by trained, professional technicians with the knowledge, tools, and equipment required to do the job properly and safely. It informs these technicians of conditions that may occur on some vehicles, or provides information that could assist in proper vehicle service. The procedures should not be performed by "do-it-yourselfers." If you are not a Retailer, do not assume that a condition described affects your vehicle. Contact an authorized Land Rover service facility to determine whether the bulletin applies to a specific vehicle.

© Land Rover 2007

REPAIR PROCEDURE

STARTER INSPECTION AND SYMPTOM VERIFICATION

1. Verify the customer concern.
2. Visually inspect for obvious mechanical faults:
   - Gear selector lever cable adjustment
   - Engine (turns freely)
   - Starter motor pinion gear damaged, seized
   - Flywheel/drive plate ring gear damaged
3. Visually inspect for obvious electrical faults:
   - Battery state of charge
   - Incorrect battery fitted
   - Fuses
   - Starter relay
   - Wiring Harness(es) and connectors
   - Damaged, loose or corroded battery or starter cables and connections
   - Damaged, loose or corroded engine ground cable and connections
   - Ignition switch
   - Generator
   - Engine control module (ECM)
   - Transmission control module (TCM)
4. If an obvious cause for an observed or reported concern is found, correct the cause (if possible) before proceeding to the next step.

⚠ **CAUTION: A Midtronics PSC-550 Vehicle Power Supply must be connected to the vehicle battery during diagnosis.**

5. Connect the Midtronics PSC-550 power supply to the vehicle battery.
6. Connect IDS to the vehicle and begin a new diagnostic session by entering the correct VIN for the current vehicle.
7. Use the approved diagnostic system or a scan tool to retrieve any diagnostic trouble codes (DTCs) before moving onto the symptom chart or DTC index.
8. Make sure all DTCs are cleared following rectification.
9. Disconnect diagnostic equipment.

© Land Rover 2007

STARTER DIAGNOSIS AND TESTING TABLE

The engine does not crank (starter motor does NOT turn)

Possible Causes	Action
Gear selector not in 'P' or 'N' position Battery state of charge. Starter relay circuit fault. Invalid key code. Harness/Connectors. Ignition switch fault. Generator fault. Starter motor solenoid fault. Starter motor fault. Engine seized.	• Make sure the gear selector is in the 'P' or 'N' position and correctly adjusted. • Check battery condition and state of charge. • Check for DTCs indicating an immobilizer fault. • Check the starter motor relay, ignition switch and generator circuits. Refer to the electrical guides. • Check that the engine turns freely.

10. During cranking confirm that the voltage at the starter motor solenoid terminals (battery positive terminal and starter relay terminal) is also present at the motor positive terminal.
11. If no voltage is present at the motor positive terminal during cranking, replace the starter motor solenoid as described in "Starter Solenoid - Removal and Replacement" Section of this bulletin:
    - Disconnect battery
    - Remove starter motor
    - Install the starter motor service kit.

The engine does not crank (starter motor DOES turn)

Starter motor installation. Starter motor fault. Flywheel/Drive plate ring gear.	• Check the starter motor installation (fasteners tight, starter motor square to engine, etc). • Check the starter motor and flywheel/drive plate ring gear teeth for damage, foreign objects, etc.

© Land Rover 2007

STARTER SOLENOID REMOVAL AND REPLACEMENT

NOTE: All illustrations show Range Rover V8 vehicles. Other models are similar.

NOTE: Global Technical Reference (GTR) lookup sequence is as follows:
GTR Home > NAS > Service Information/ LM – New Range Rover > 2007 > Workshop Manuals > Bookmark "Powertrain/Engine/303-06" Links "Removal and Installation Starter Motor (86.60.01)"

1. Refer to GTR Workshop Manual, Section 86.60.01 and remove the starter motor.
2. Release the starter motor terminal cover. (Figure 1)
3. Release the starter motor terminal by removing the nut. (Figure 2)
4. Remove the starter motor bolts. (Figure 3)

CAUTION: Make sure the starter motor armature remains located inside the motor housing.

5. Remove the starter motor from the gear housing. (Figure 4)
6. Remove the starter solenoid screws. (Figure 5)

Figure 1

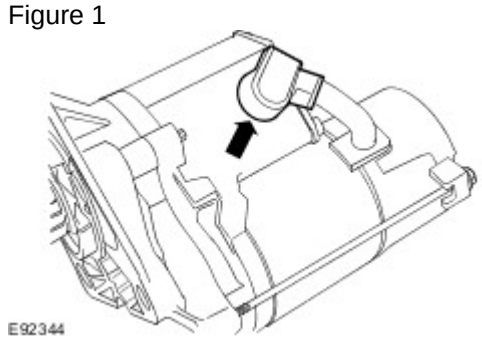

Figure 2

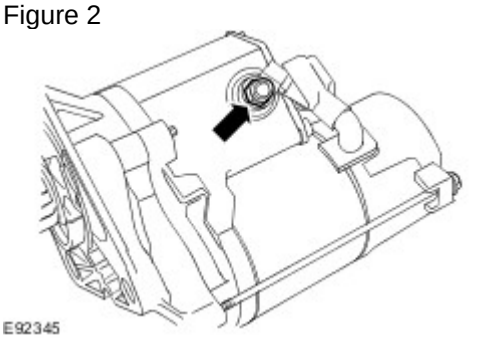

Figure 3

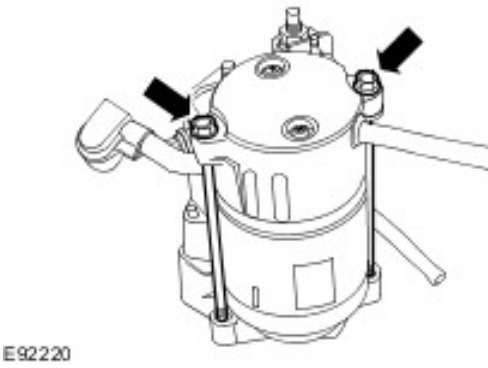

Figure 4

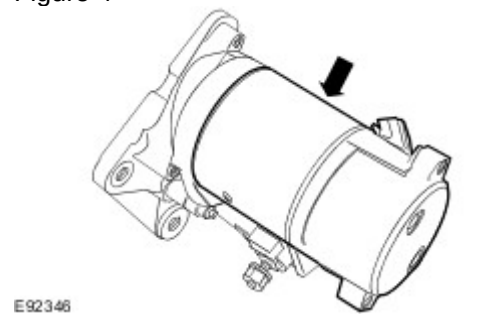

Figure 5

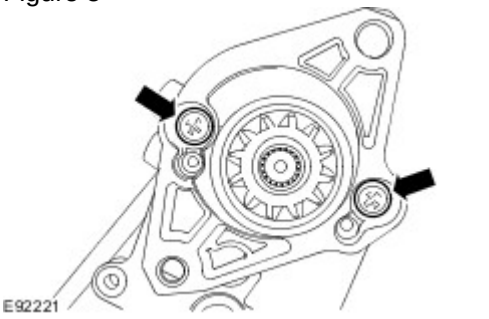

© Land Rover 2007

CAUTION: Make sure the gears and bearings remain located in the gear housing.

7. Remove the starter solenoid. (Figure 6)

CAUTION: Make sure the gears and bearings remain located in the gear housing.

8. Install the starter solenoid to the gear housing.
9. Install the starter solenoid screws and tighten to **10Nm (7lbf ft)**.
10. Install the starter motor to the gear housing.
11. Install the starter motor bolts and tighten to **10Nm (7lbf ft)**.
12. Secure the starter motor terminal and tighten to **5Nm (4 lbf ft)**.
13. Secure the starter motor terminal cover.
14. Refer to GTR Workshop Manual, Section: 86.60.01 and install the starter motor

Figure 6

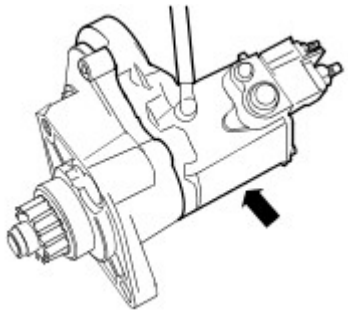

© Land Rover 2007